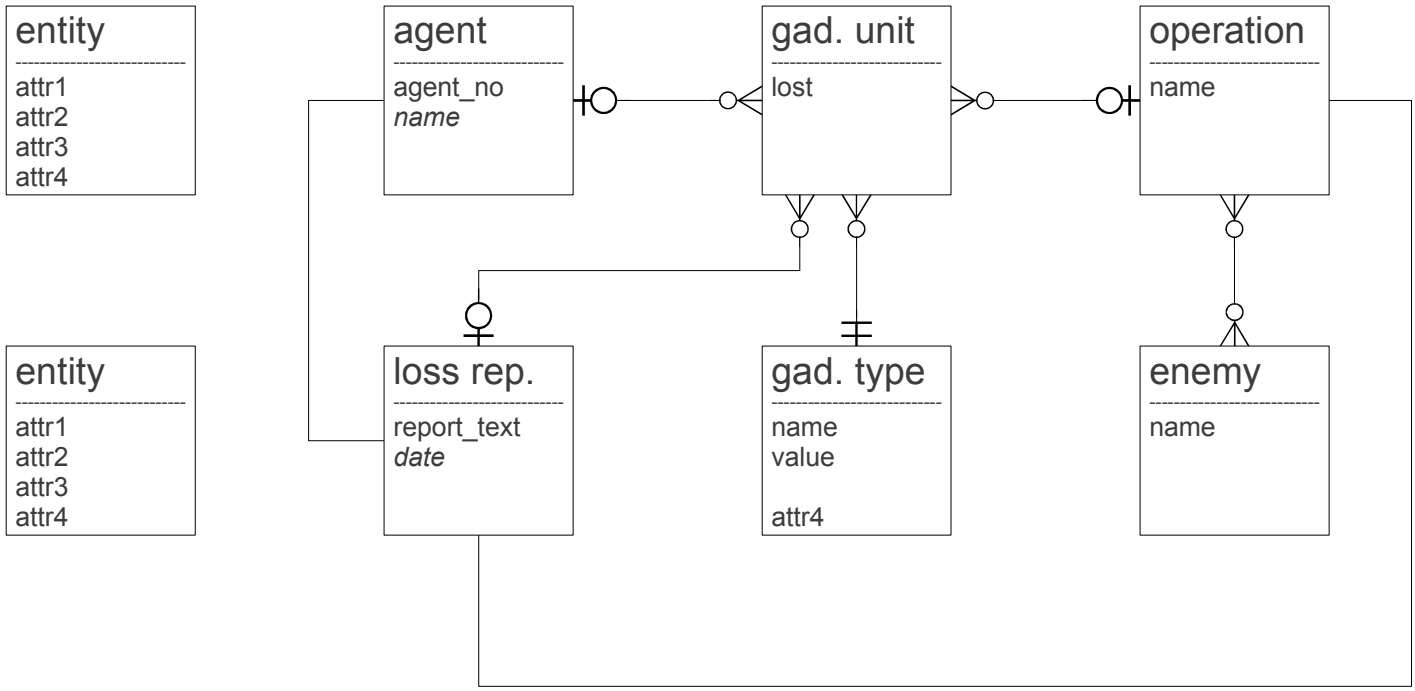
entity
attr1
attr2
attr3
attr4
agent
agent_no
name
gad. unit
lost
operation
name
entity
attr1
attr2
attr3
attr4
loss rep.
report_text
date
gad. type
name
value
attr4
enemy
name